Detector
Vertical Type (8.20x5.25x6.5mm)

Water-proof | Dust-proof | LEAD FREE | RoHS Compliant

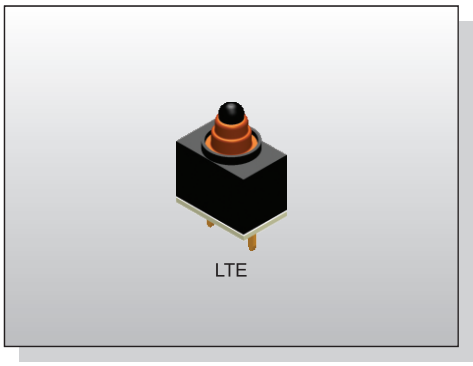

FEATURES
※Water-proof type
※Compact size
※PCB Space saving

APPLICATION
※White goods
※Automotive
※Motorcycle

SPECIFICATION

Contact Rating	50μA, 5V DC 0.1A, 12V DC
Contact Resistance	500mΩ max.
Insulation Resistance	100MΩ min. 500V DC
Dielectric Strength	500V AC/1 minute
Operating Force	102±50gf
Operating Position	4.1±0.3mm
Operating Life	300,000 cycles
Operating Temp.	-40°C ~ +85°C
Storage Temp.	-40°C ~ +85°C

HOW TO ORDER

LTE-□□□□□□

- Contact Form:
  1: Normal Open
  2: Normal Close
- Operating Force:
  102gf (1N)
- Post Type(Screw Mounting):
  N=Non
  T=Top Side
  S=Single Side
- Terminal Type:
  1=PC Board Terminal Type
  2=Lead Terminal Type
- V=Lead Free
- Special Code

CIRCUIT

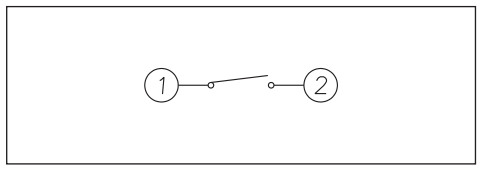

PACKAGE
<Bag>
500 pcs
<Tube>
LTE-□1T: 54 pcs

LTE

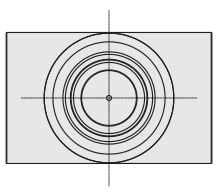

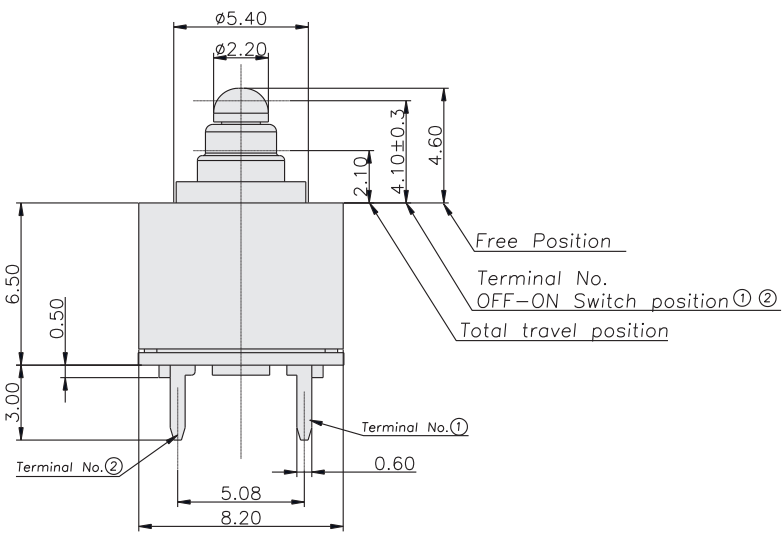

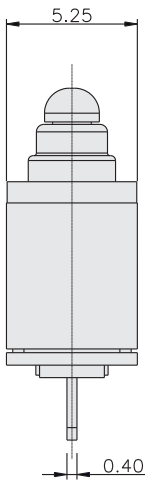

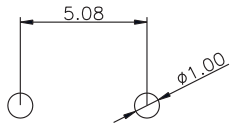

PCB LAYOUT