# SL6 SERIES

*Slide Type (2P2T)*

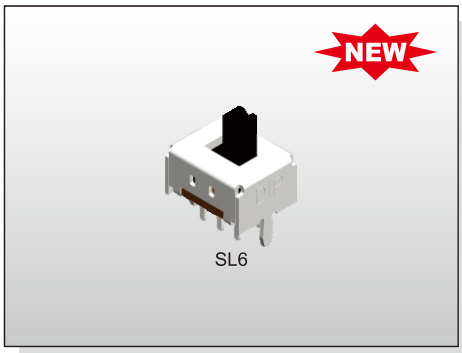


## FEATURES

※4.7mm height
※A sharp click feeling
※10,000 operation life cycles

## APPLICATION

※Potable audio
※Instrumentation
※Radio cassette

## SPECIFICATION

| | |
|---|---|
| Contact Rating | 0.1A, 12V DC |
| Contact Resistance | 20mΩ max. |
| Insulation Resistance | 100MΩ min. 500V DC |
| Dielectric Strength | 500V AC/1 minute |
| Operating Force | 200±150gf |
| Travel | 2mm |
| Operating Life | 10,000 cycles |
| Operating Temp. | -40°C ~ +85°C |
| Storage Temp. | -20°C ~ +60°C |

## HOW TO ORDER

**S L 6 N C H V R**

- Poles-Positions: 2P2T
- Timing: Non-Shorting
- With Post
- Through Hole
- RoHS & Lead Free Solderable
- Package: Tape & Reel

## CIRCUIT

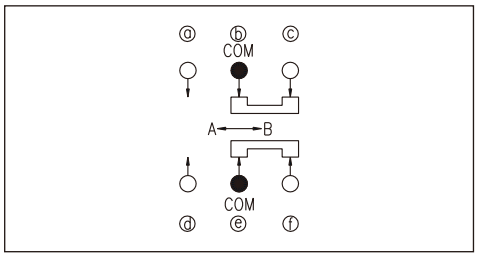


## PACKAGE

**<Tape & Reel>**
300 pcs


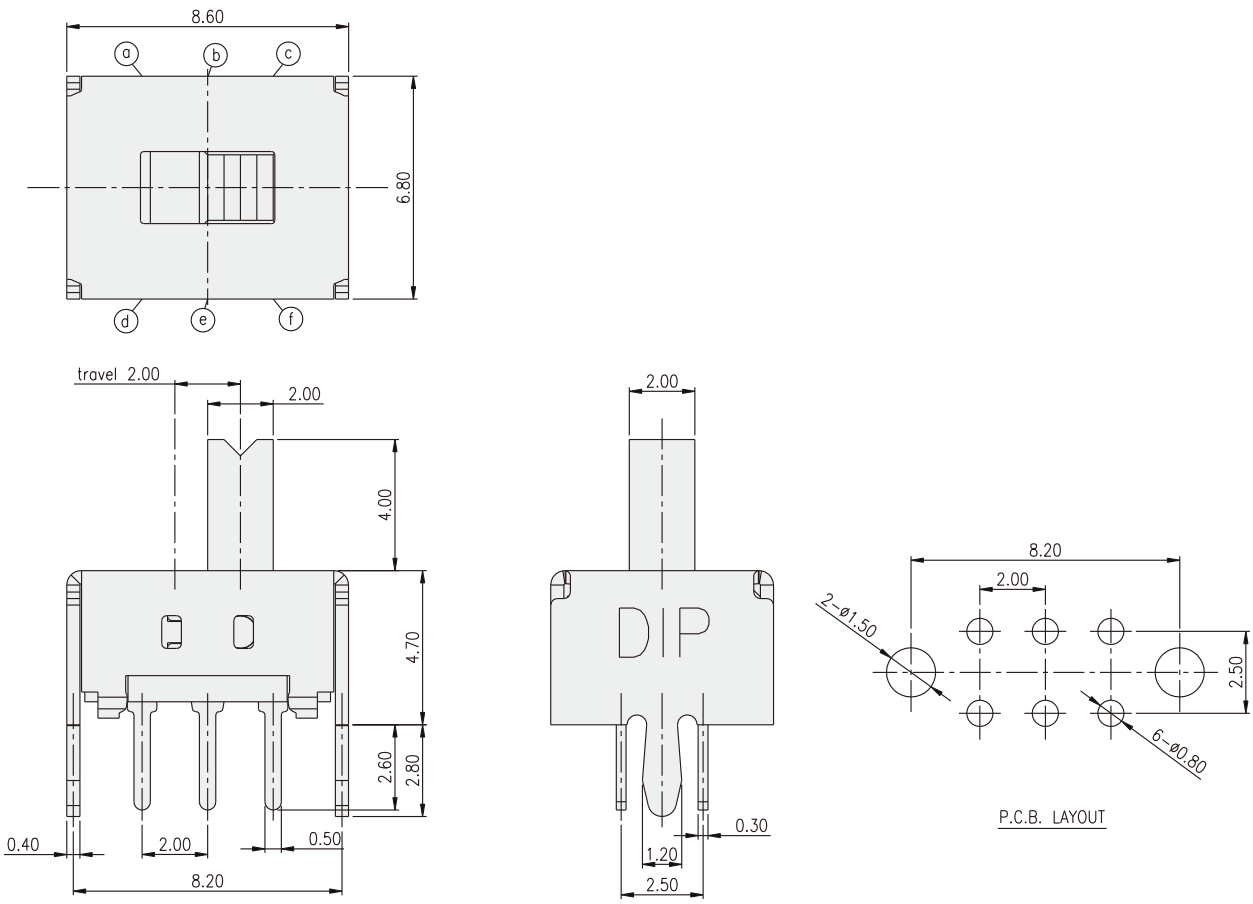
## SL6